BRIDGE CODE	R.R. BRIDGE NO	FED ROAD DIST NO	STATE	PROJ NO	FISCAL YEAR	SHEET NO	TOTAL SHEETS
	199	8	N D	MG-1-010 (051) 917		6L	

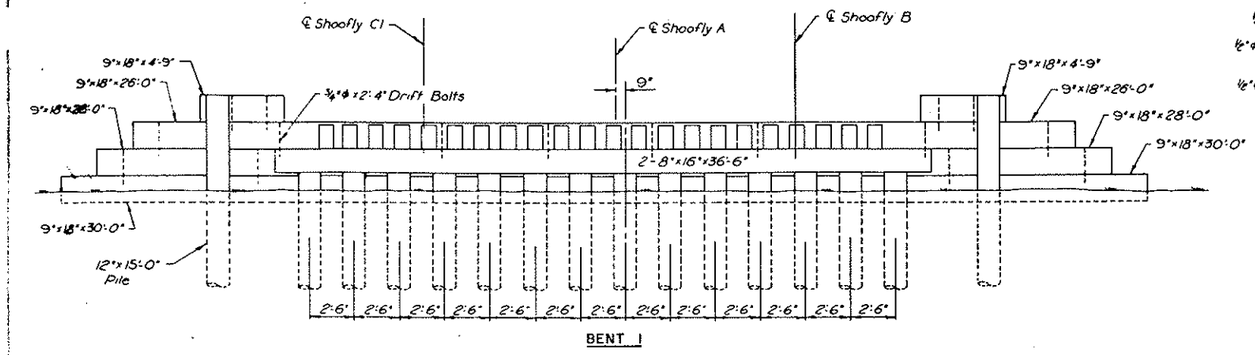

BENT 1

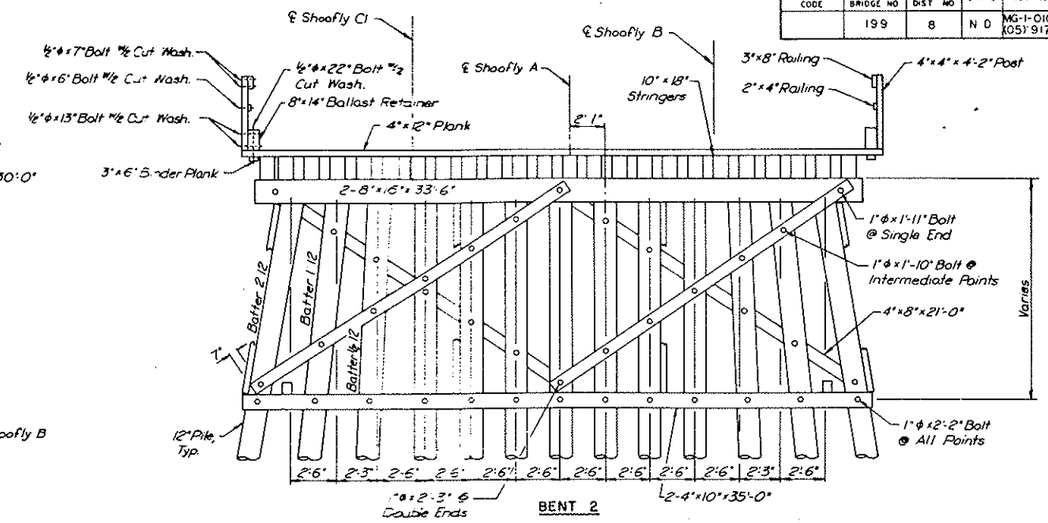

BENT 2

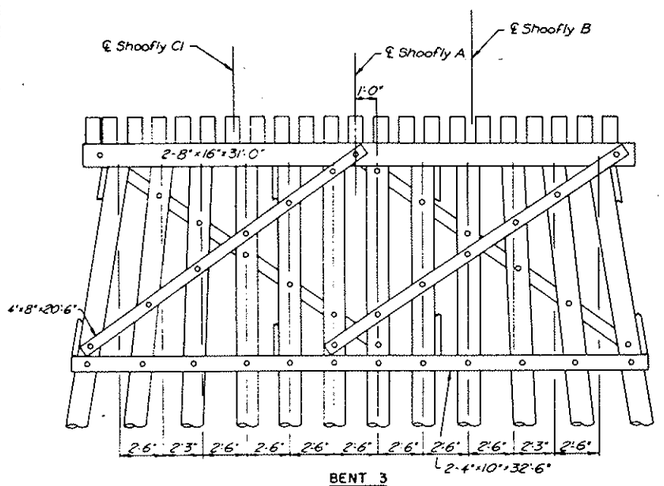

BENT 3

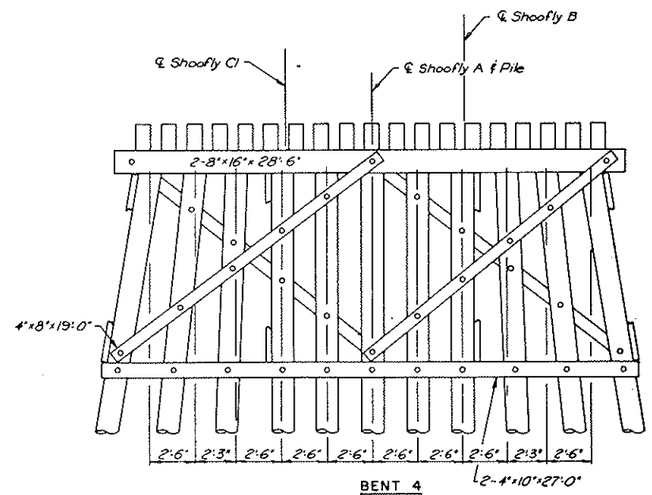

BENT 4

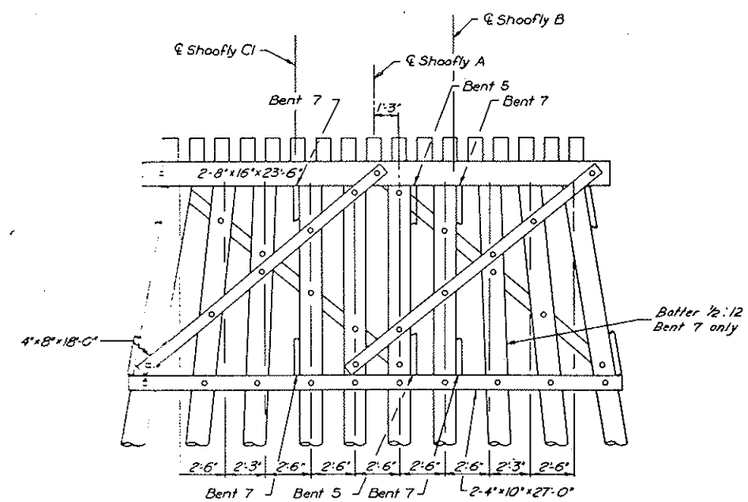

BENTS 5 & 7

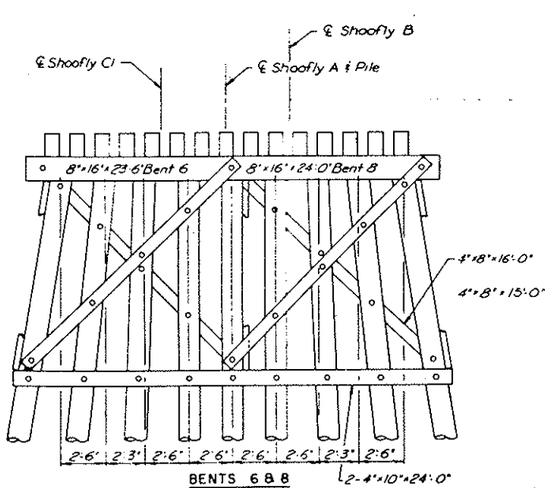

BENTS 6 & 8

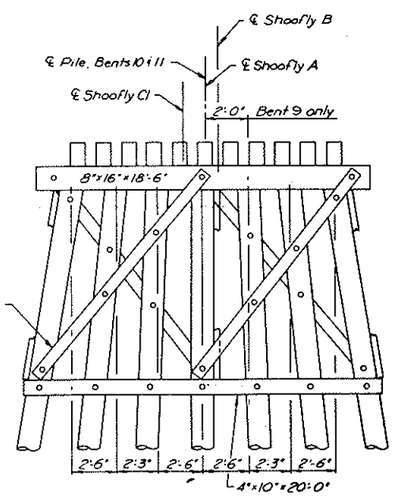

BENTS 9 THRU 11

Note:
For Ground Line see "Temporary Trestle Layout" and Cross Sections.

QUANTITIES

BENT DETAILS
(SHEET 1 OF 2)
TRESTLE
BURLINGTON NORTHERN, INC.
RAILWAY UNDERPASSES

U.S. HIGHWAY NO. 10
MORTON COUNTY

10-916.95-41